Design procedures and a Developed Computer Code for Preliminary Single Annular Combustor Design

B. S. Mohammad[1] and S. M. Jeng[2]
University of Cincinnati, Cincinnati, OH, 45220

Gas Turbine Combustor (GTC) design is a challenging and time consuming process. Several methodologies for conventional combustor design have been developed. The objective of this paper is to provide detailed procedures for the preliminary design of a Single Annular Combustor (SAC) (also known as Fuel Rich Dome Combustor). The design algorithm employs empirical and semi-empirical models which include diffuser section design, air distribution computations, combustor sizing, fuel nozzle design, axial swirler design, heat transfer calculations (with/without cooling, thermal barrier coating) and dilution holes design. The design process will provide the combustor geometry as well as an evaluation of the combustor performance (NOx and CO emissions). A computer code has been developed based on the design procedures. A SAC design has been implemented by the computer program in order to show the program capabilities. The program run time is in the order of magnitude of minutes. Our aim is to provide a tool to serve in educational purposes. Also, to provide a kit to help understand the important technical issues governing the GTC design. This paper shows the first version of the software. In future, the software will have more capabilities including the Lean Premixed Prevaporized (LPP) concept.

Nomenclature

$A_{3.0}$	=	Pre-Diffuser inlet area
$A_{3.1}$	=	Pre-Diffuser exit area
A_d	=	Dome area
AF	=	Air to fuel ratio by mass

[1] PhD candidate, Aerospace Engineering and Engineering Mechanics, University of Cincinnati, ML70, 745 Baldwin Hall, Cincinnati, OH, 45219, AIAA Student member.
[2] Professor, Aerospace Engineering and Engineering Mechanics, University of Cincinnati, ML 70, and 745 Baldwin Hall, Cincinnati, OH, 45219, and AIAA Member.

A_l = Liner cross sectional area (area bounded by outer and inner liners)
A_p = Passage area
ALR = ratio between atomizing air flow rate and fuel flow rate
AR = Area ratio of the Pre-diffuser (aerodynamic diffuser)
A_{ref} = Combustor reference area
$Area_{pn}$ = Primary fuel nozzle exit area
$Area_{sn}$ = Secondary fuel nozzle exit area
A_{sw} = Area of the swirler
C_1 = Heat transfer by convection on the liner hot side
C_2 = Heat transfer by convection between on the liner cold side
$C_{cooling}$ = Fraction of air to cool turbine
C_d = Discharge coefficient for the simple plain dilution hole
$C_{d\infty}$ = Maximum possible discharge coefficient
C_{dp} = Discharge coefficient for the primary nozzle
C_{ds} = Discharge coefficient for the secondary nozzle
CO = Carbon Monoxide
C_{pa} = Air specific heat.
C_p = Diffuser Actual pressure recovery coefficient
C_{pg} = Hot gases specific heat
C_{pi} = Diffuser ideal pressure recovery coefficient
C_{pfv} = Gaseous phase (fuel vapor) specific heat
d_h = Dilution hole diameter
d_j = Primary dilution jet diameter
dpl = Liner pressure drop
d_t = Nozzle tip diameter.
d_{t_pn} = Primary fuel nozzle tip diameter
d_{t_sn} = Secondary fuel nozzle tip diameter
D_{an} = Annulus area hydraulic diameter
D_f = Fuel droplet diameter
D_{hs} = swirler hub diameter
D_L = Liner hydraulic diameter
$DPTP$ = Ratio of dynamic pressure to total pressure
D_S = Nozzle swirl chamber diameter
D_{ts} = Swirler tip diameter
FA_{th} = Stoichiometric fuel air ratio by mass
FN = Standard US Nozzle flow number
FN_{SI} = Nozzle flow number in SI units
fr = Ratio of $\dot{m}_{fp\,max}$ to the total fuel flow rate per nozzle
h_{fg} = Latent heat of vaporization of the fuel droplet
H = Percentage of hydrogen by mass in the fuel
H = Monatomic Hydrogen
$H2O$ = Water vapor
H_d = Dome height
H_p = Overall passage height

HV = Heating value of the fuel.
J = Dilution jet momentum flux ratio to main stream
k_a = Air thermal conductivity.
k_g = Thermal conductivity of the hot gases
k_{gf} = Thermal conductivity of the gaseous fuel
k_{sw} = Swirler constant
k_{TBC} = Thermal conductivity of the TBC layer
k_w = Liner thermal conductivity
K_{1-2} = Net heat conducted through the liner
K = Dilution Jet pressure parameter
K_b = Backward reaction rate
K_f = Forward reaction rate
K_v = Fuel evaporation constant
L_c = Combustor length
L_l = Liner length
L_b = Beam length
L_{cs} = Cooling segment length
L_f = Fuel luminosity factor
L_{zone} = Zone length
LW = Diffuser length to width ratio
LW_{max} = Maximum length to width ratio of the pre-diffuser
$\dot{m}_{c_a}$ = Primary swirling air flow rate
$\dot{m}_{c_a_{pn}}$ = Primary swirling air flow rate per nozzle
$\dot{m}_{c_cc}$ = Liner convective cooling flow rate
$\dot{m}_{c_d}$ = Dome air flow rate
$\dot{m}_{c_dc}$ = Dome cooling air flow rate
$\dot{m}_{c_dil}$ = Total Secondary dilution jets air flow rate
$\dot{m}_{c_p}$ = Total Primary dilution jets flow rate
$\dot{m}_{c_passage}$ = Passage air flow rate
$\dot{m}_{c_s}$ = Secondary swirling air flow rate
$\dot{m}_{c_s_{pn}}$ = Secondary swirling air flow rate per nozzle
$\dot{m}_{fuel}$ = Total fuel flow rate
$\dot{m}_{fp\,max}$ = Primary nozzle fuel flow rate at the point where the secondary valve opens.
$\dot{m}_{f_pn}$ = Fuel flow rate per nozzle
$\dot{m}_{total}$ = Total core mass flow rate
$\dot{m}_{sw}$ = Swirling air flow rate.
M_3 = Compressor Exit Mach number
$M_{3.1}$ = Pre-Diffuser exit Mach number
n = Number of jets or dilution holes
n_{bands} = Number of dilution rows or bands
n_v = Number of vanes of the swirler
N = Monatomic Nitrogen
$N2$ = Nitrogen

N_{fn} = Number of fuel nozzles
N_i = Molar concentration of the species i
NOx = Nitrous Oxides
Nu = Nusselt number
$O2$ = Oxygen
O = Monatomic oxygen
OH = Hydroxyl
$P_{3.0}$ = Static pressure at the Pre-diffuser inlet
P_g = Hot gases pressure
PF = Pattern factor
Pr_g = Hot Gases Prandtl number
P_{t3} = Total compressor exit pressure
P_z = Pressure in a combustor zone
q_{ref} = Reference dynamic head
r_c = Compressor Pitch radius
R = Gas constant for air
R_1 = Heat transfer by radiation between the hot gases and the liner
R_2 = Heat transfer by radiation between the liner and the casing
R_c = Constant of conversion=82.05 $cm^3.atm/(gmol.K)$
Re_d = Reynolds number based on the fuel droplet diameter
$Re_{L_{cs}}$ = Reynolds number based on the segment length
Re_s = Reynolds number based on the Slot depth
s = Cooling slot depth
S_N = Swirl number
SMD = Sauter Mean Diameter
t = Fuel spray thickness
t_l = Cooling strip lip thickness
t_d = Fuel droplet lifetime
t_r = Residence time
t_{TBC} = Thickness of the Thermal Barrier Coating
t_w = Liner thickness
$T_{3.0}$ = Static temperature at the Pre-diffuser inlet
T_g = Temperature of the hot gases in the primary zone
T_i = Temperature at the interface between the TBC and the liner
T_s = Fuel surface temperature
T_{st} = Stoichiometric Flame temperature
T_{t4} = Turbine Inlet Total Temperature
T_{t3} = Total compressor exit temperature
T_{w1} = Temperature of the liner hot side
T_{w2} = Temperature of the liner cold side
$T_{w,ad}$ = Effective wall or adiabatic wall temperature
T_z = Temperature in a combustor zone
U_g = Hot gases velocity
U_j = Dilution jet velocity

U_r = Relative velocity between air and fuel droplets (close to fuel nozzle tip)
v_c = Swirler vanes chord
v_t = Swirler vane thickness
v_s = Swirler vane spacing
$V_{3.0}$ = Air velocity at the Pre-diffuser inlet
$V_{3.1}$ = Pre-diffuser exit velocity
V_c = Combustor volume
V_d = Velocity in the dome area
V_e = Volume of fuel evaporation
V_p = Velocity in the passage
V_r = Relative velocity between the fuel droplet and the combustion products
V_{ref} = Reference velocity
V_{zone} = Gas velocity in a combustor zone
W = Pre-diffuser inlet width
x = Parameter to enable estimation of the expected fuel spray thicknesses
x_i = Mole fraction of the species *i*
Y = Dilution jet penetration
Y_{max} = Maximum penetration of the dilution jet
α = Dilution hole mass flow rate/ Annulus mass flow rate
B_q = Transfer number
ΔP_{set} = Pressure setting for the secondary fuel nozzle to open
ΔP_{min} = Minimum pressure below which the pilot fuel nozzle is closed
ΔP_{max} = Maximum pressure supplied by the fuel pump
ε_{pd} = Pressure loss in the aerodynamic diffuser as a fraction of its inlet total pressure
ε_{dd} = Pressure loss in the dump diffuser as a fraction of its total inlet pressure
ε_t = Total pressure loss in the diffuser section as a fraction of total inlet pressure
ε_g = Hot gas emissivity
ε_c = Casing emissivity.
ε_w = Liner emissivity.
ε_c = Total pressure loss through the combustor as a fraction of total inlet pressure
ϕ_p = Equivalence ratio in the primary zone
ϕ_s = Equivalence ratio in the secondary region
γ = Air specific heat ratio
η = Cooling film effectiveness
μ_f = Fuel viscosity
μ_g = Hot gases viscosity.
θ_{pn} = ½ the spray angle of the primary nozzle
θ_{sn} = ½ the spray angle for the secondary nozzle
θ_v = Swirler vane angle
θ_d = Dilution jet angle
θ = Diffusion angle of the aerodynamic diffuser (or Pre-diffuser)
ρ_{fuel} = Fuel density
ρ_g = Hot gases density

$\rho_{3.0}$ = Air density at the Pre-diffuser inlet
σ = Boltzman constant
σ_v = Swirler vanes solidity
σ_f = Fuel surface tension

I. Introduction

THe design process of a Fuel Rich Dome Combustor (also referred to as Single Annular Combustor (SAC)) is a challenging task. The design procedures involve lots of compute-intensive calculations. The design process includes coupled non-linear equations, implicit equations, different charts and lots of mathematics and logic to synchronize the design process.

Mellor[1] and Lefebvre[2] collected an extensive list of empirical and analytical tools. They discussed details about the assumptions behind different equations involved in the design process as well as their range of validity. However, they did not provide a method to automate their design process. There are several other published preliminary designs for aircraft Gas Turbine Combustor (GTC).[3-5]

This paper presents a mechanism to automate the design procedures of a SAC in a detailed step-by-step manner. An integral part of our automation mechanism, is the development of software that automates the design process. The fundamental objective of this software is to minimize the time spent in the preliminary aircraft GTC design process. The software will also enable the designer to fine tune several critical parameters and check their impact on the combustor's size and performance in a timely manner.

In Section II, the detailed design procedures of the SAC are presented. In Section III, the performance evaluation of the SAC will be discussed, while in the Section 3, the automation code is used to design a SAC. The performance of that specific SAC is also analyzed in Section 3. The reader is encouraged to refer to the books by Mellor[1] and Lefebvre[2] for more details on the assumptions and derivations of the design equations.

II. SAC Design Procedures

A. Data required to initiate the design process

The design process assumes the following parameters are given: $\dot{m}_{total}$, T_{t3}, P_{t3}, r_c, M_3, $C_{cooling}$, T_{t4} and ε_c. The previous parameters are related to the thermodynamic cycle and engine configuration. In other words, they represent the operational requirements and duty of the GTC. The numerical values are given at the point of

maximum power. Furthermore, in the current version of the design code, we assume a constant area combustor. The default input fuel is assumed to be Jet A. However, the user can simply change the properties to an alternate fuel.

B. Air Distribution through the Combustor

A typical GTC is shown in Fig. 1.[6] The air flows from the compressor to two different combustor sections: the dome ($\dot{m}_{c_d}$) and the passage ($\dot{m}_{c_passage}$). The air flowing through the dome has three different purposes. The first is to atomize the liquid fuel issuing from the fuel nozzle ($\dot{m}_{c_a}$). The second is to create a swirling flow that stabilizes the combustion ($\dot{m}_{c_s}$) and the third to cool the dome ($\dot{m}_{c_dc}$). Also, the air flowing through the passage has three purposes. The first is to provide cooling for the liner. The second is to provide the primary air jets needed to complete the combustion reaction in the secondary region ($\dot{m}_{c_p}$) and the third is to provide the dilution air jets necessary to achieve the required exit temperature distribution ($\dot{m}_{c_dil}$). The process is then summarized as follows:

1) Compute $\dot{m}_c$ from Eq. (1).

$$\dot{m}_c = \left(1 - C_{cooling}\right) * \dot{m}_{total} \tag{1}$$

2) AF at the design point, maximum power conditions, is estimated using Eq. (2). The equation describes an energy balance of the GTC.

$$AF = \left(HV - C_{pg} * T_{t4}\right) \div \left(C_{pg} T_{t4} - C_{pa} T_{t3}\right) \tag{2}$$

3) $\dot{m}_{fuel}$ is estimated using Eq. (3).

$$\dot{m}_{fuel} = \dot{m}_c \div AF \tag{3}$$

4) The value of $\dot{m}_{c_a} / \dot{m}_{fuel}$ is assumed somewhere between 2 and 3 to ensure sufficient atomization.[3] Now we have an estimate of the $\dot{m}_{c_a}$.

5) The ratio $\dot{m}_{c_dc} / m_c$ is assumed somewhere between 10-15% for typical combustor.[3]

6) ϕ_p is assumed between 1.4 and 1.5.[7] Hence, Eq. (4) could be used to estimate the value of $\dot{m}_{c_s}$. The equivalence ratio shouldn't be too lean at idle power. Otherwise the combustion efficiency will be too low. Also, it shouldn't be overly rich at high power to avoid smoke problems.

$$\dot{m}_{c_s} = AF_{th} \div \phi_p * \dot{m}_{fuel} - \dot{m}_c - \dot{m}_{c_dc} \tag{4}$$

7) $\dot{m}_{c_d}$ and $\dot{m}_{c_passage}$ are both calculated from Eqs. (5) and (6) respectively.

$$\dot{m}_{c_d} = \dot{m}_{c_a} + \dot{m}_{c_s} + \dot{m}_{c_dc} \tag{5}$$

$$\dot{m}_{c_passage} = \dot{m}_c - \dot{m}_{c_d} \tag{6}$$

8) $\dot{m}_{c_p}$ is be calculated from Eq. (7). Also the value of ϕ_s is assumed.

$$\dot{m}_{c_p} = AF_{th} / \phi_s * \dot{m}_c / AF - \dot{m}_{c_d} \tag{7}$$

9) The value of $\dot{m}_{c_cc}$ is typically 0.75 kg s^{-1} m^{-2} atm^{-1}. Once we estimate the liner area (in section C), we can simply determine the required cooling flow rate. Hence, the $\dot{m}_{c_dil}$ can be calculated using Eq. (8).

$$\dot{m}_{c_dil} = \dot{m}_{c_passage} - \dot{m}_{c_cc} - \dot{m}_{c_p} \tag{8}$$

10) The ratio $\dot{m}_{c_d} / \dot{m}_c$ and $\dot{m}_{c_passage} / \dot{m}_c$ can simply be estimated using the flow rates we already calculated. Usually 20-40 % of the air flows through the dome and the remaining through the passage.

C. Combustor Sizing

The main dimensions of the Fuel Rich Dome Combustor are shown in Fig. 2. We need to determine different geometrical variables as well as the pressure drop across the liner and the swirlers. The combustor main dimensions are estimated according to the velocity method. That is the dimensions will assume a certain prescribed velocity. Typical velocity ranges are assumed according to conventional combustor designs. The sizing procedures are:

1) $T_{3.0}$, $P_{3.0}$, $\rho_{3.0}$ and $V_{3.0}$ at the inlet of pre-diffuser (from now on we refer to that location as station 3.0) are obtained from Eq. (9-12) respectively.

$$T_{3.0} = T_{t3} \div \left(1 + (\gamma - 1) \div 2M_{3.0}^2\right) \tag{9}$$

$$P_{3.0} = \left(T_{3.0} \div T_{t3}\right)^{\gamma/(\gamma-1)} * P_{t3.0} \tag{10}$$

$$\rho_{3.0} = P_{3.0} \div \left(R * T_{3.0}\right) \tag{11}$$

$$V_{3.0} = M_{3.0} * \sqrt{\gamma * R * T_{3.0}} \tag{12}$$

2) Calculate $A_{3.0}$ from Eq. (13). Hence, compute W from Eq. (14).

$$A_{3.0} = \dot{m}_{total} \div \left(\rho_{3.0} * V_{3.0}\right) \tag{13}$$

$$W = A_{3.0} \div \left(\pi * 2 * r_c\right) \tag{14}$$

3) V_p is assumed to be within 35-60 m/s.[8] Also, V_d is assumed to be within 7-12 m/s.[8]

4) We already estimated $\dot{m}_{c_d}$. Now we can estimate A_d from Eq. (15). Similarly, we get A_p from Eq. (16).

$$A_d = \dot{m}_{c_d} \div \left(\rho_{3.0} * V_d\right) \tag{15}$$

$$A_p = \dot{m}_{c_passage} \div \left(\rho_{3.0} * V_p\right) \tag{16}$$

5) A_{ref} is the sum of both areas as shown in Eq. (17).

$$A_{ref} = A_d + A_p \tag{17}$$

6) V_{ref} and reference dynamic head q_{ref} are calculated from Eqs (18) and (19) respectively.

$$V_{ref} = \dot{m}_c \div \left(\rho_{3.0} * A_{ref}\right) \tag{18}$$

$$q_{ref} = 1/2\rho_{3.0} * V_{ref}^2 \tag{19}$$

7) The dome height (H_d) and overall passage height (H_p) are calculated from Eqs (20) and (21) respectively.

$$H_d = A_d \div \left(2 * \pi * r_c\right) \tag{20}$$

$$H_p = A_{ref} \div \left(2 * \pi * r_c\right) - H_d \tag{21}$$

8) The fuel spray coverage is almost symmetric in the dome region. Therefore, we can assume that the circumferential coverage of the swirl cup (fuel nozzle) will have similar dimensions as the dome height. Thus, we can use Eq. (22) to estimate N_{fn}.

$$N_{fn} = 2 * \pi * r_c / H_{dome} \tag{22}$$

9) L_l is estimated using Eq. (23).[2] dpl will be estimated in section D. The value of PF ranges between 0.2 and 0.3. Eq. (23) is based on the older generation of GTC. For newer GTC designs, the ratio L_l / H_d ranges between 2 and 3.[1] L_c will be obtained by summing L_D and L_l. It should be mentioned that the combustor length to fuel injector spacing ratio has a significant influence on the PF.

$$L_l = -20 \div \left(dpl \div q_{ref} * H_d * Ln\left(1 - PF\right)\right) \tag{23}$$

10) The total air and fuel flow rates have already been estimated through the combustor as well as the number of fuel nozzles and hence, the air and fuel flow rates per fuel nozzle can be calculated. Consequently, all the previously calculated flow rates could be obtained per nozzle.

D. Pre-Diffuser Design

Typically the pre-diffuser begins with a constant area section to dissipate the wakes. The constant area section is followed by a diffusing section to recover a good portion of the inlet dynamic head. The diffuser schematic is shown in Fig. 3.[1] Dump diffuser follows the diffusing section to further reduce the speed and to enable stable combustion. The dump diffuser is a diffuser with large area expansion and minimum axial length that will result in abrupt reduction of the flow velocity, but with a very slight pressure recovery. The geometrical variables of the pre-diffuser are given in Fig. 4.

An important parameter to define is AR. It is the ratio of $A_{3.1} / A_{3.0}$. The second parameter we define is $DPTP$. It is the ratio of the dynamic pressure to total pressure as given by Eq. (24). At the diffuser inlet the $DPTP$ is usually around 6-8% and may even go to as high as 10%.[1] The $DPTP$ indicates the maximum available pressure to recover. At the exit of the pre-diffuser the $DPTP$ is around 1.5%. Therefore, we are not worried about the total pressure loss that takes place in the dump diffuser (the maximum available is already 1.5%).

Another important parameter to define is the C_p. It measures how much pressure is recovered in the diffuser. The definition of C_p is given in Eq. (25) and the C_{pi} is given in Eq. (26). The difference between C_p and C_{pi} is that the ideal pressure recovery assumes that there are no losses in the passage.

$$\begin{aligned} DPTP &= q / P_{total} = (1/2)\rho V^2 \div P_{total} \\ &= 1 - \left(1 + (\gamma - 1) \div 2 * M^2\right)^{-\gamma \div (\gamma - 1)} \end{aligned} \tag{24}$$

$$C_p = \left(P_2 - P_1\right) \div q \tag{25}$$

$$C_{pi} = 1 - \left(1 \div AR^2\right) \tag{26}$$

The 2D diffuser should be designed with minimum pressure loss. One of the best approaches to the 2D diffuser is to obtain the total pressure loss in both the pre-diffuser (aerodynamics diffuser) and dump diffuser as function of AR. Then, the AR corresponding to the minimum pressure loss can be calculated.

However, to automate the process we need to fit some curves for the 2D diffuser. Two fits are required for this process automation. First, the value of the length to width ratio (LW) that corresponds to the value of AR for no appreciable stall is required. This can be obtained from the chart provided by Renau et al[9]. Equation (27) shows the required relation for $AR < 2$ while Eq. (28) is valid for AR >2. From the same chart we can also get an estimate for C_p as function of LW and AR (see Eq. (29)). θ is estimated using Eq. (30).

$$LW = \left(AR \div 1.044\right)^{1 \div 0.38859} - 0.26,\ AR < 2 \tag{27}$$

$$LW = 44.8535 \div \left(1 + 2165.67 * e^{-2.8225 AR}\right),\ AR > 2 \tag{28}$$

$$C_p = -0.918 * \left(\left(LW\right)^{-1} * AR^{-0.5}\right) + 0.677 * \left(\left(LW\right)^{-2} * AR^{-2}\right) + 0.74 \tag{29}$$

$$\tan(\theta) = \left(AR - 1\right) \div \left(2LW\right) \tag{30}$$

ε_{pd} is given by Eq. (31). Similarly, ε_{dd} is given by Eq. (32). Equation (34) assumes that the static pressure rise is negligible. The objective here is to let ε_{dd} in Eq. (32) be a function in AR. This can be achieved using the chain rule as depicted in Eq. (33). Plugging Eq. (33) in Eq. (32), we get Eq. (34). ε_t is then calculated from Eq. (35).

$$\varepsilon_{pd} = \left(C_{pi} - C_p\right)\left(1 - \left(1 + \left(\gamma - 1\right) \div 2 * M_{3.0}{}^2\right)^{-\gamma \div (\gamma - 1)}\right) \tag{31}$$

$$\varepsilon_{dd} = \left(1 - A_{3.1} \div A_{ref}{}^2\right)\left(1 - \left(1 + \left(\gamma - 1\right) \div 2 * M_{3.1}{}^2\right)^{-\gamma \div (\gamma - 1)}\right) \tag{32}$$

$$A_{3.1} / A_{ref} = A_{3.1} / A_{3.0} * A_{3.0} / A_{ref} = A_{3.0} / A_{ref} * AR \tag{33}$$

$$\varepsilon_{dd} = \left(1 - \left(A_{3.0} / A_{ref} * AR\right)^2\right)\left(1 - \left(1 + \left(\gamma - 1\right) \div 2 * \left(M_{3.1} / AR\right)^2\right)^{-\gamma \div (\gamma - 1)}\right) \tag{34}$$

$$\varepsilon_t = 1 - \left(1 - \varepsilon_{pd}\right)\left(1 - \varepsilon_{dd}\right) \tag{35}$$

The design procedures are summarized as follows:

1) We start a loop to compute the value of AR that corresponds to the minimum pressure loss as follows:

   A. AR varies from 1.4-3 (see Reneau et al design chart[9])

   B. Calculate the corresponding LW from Eq. (27) or (28).

   C. Calculate the C_{pi} from Eq. (26).

   D. Calculate the C_{pa} from Eq. (29).

   E. Calculate ε_{pd} from Eq. (31)

   F. Calculate ε_{dd} from Eq. (34).

   G. Calculate ε_t from Eq. (35).

   H. Check θ and it should be within 4° to 8°.[9]

   I. LW should be less than the maximum prescribed value.

   J. Plot ε_t vs. AR and choose the value of AR that corresponds to the minimum ε_t.

   K. Since W is already know we estimate the length of the pre-diffuser (L_D).

2) Calculate the exit area of the pre-diffuser (we will refer to that location as station 3.1), $V_{3.1}$ and $M_{3.1}$ from Eqs. (36-38) respectively.

$$A_{3.1} = A_{3.0} * AR \tag{36}$$

$$V_{3.1} = V_{3.0} \div AR \tag{37}$$

$$M_{3.1} = M_{3.0} \div AR \tag{38}$$

3) Calculate the $DPTP_{3.0}$ and $DPTP_{3.1}$ from Eq. (24). Values should lie within the range mentioned earlier.

4) ε_l is calculated from Eq. (39). The corresponding numerical value of *dpl* is simply given by Eq. (40). Usually the liner pressure drop should be 60-70% of the total pressure drop through the combustor.[1]

$$\varepsilon_l = \varepsilon_c - \varepsilon_d \tag{39}$$

$$dpl = \varepsilon_l \div 100 * P_{t3.0} \tag{40}$$

E. Fuel Nozzle design

The fuel nozzle is responsible for delivering the required fuel flow rate at different flight conditions. The fuel provided should be atomized to a suitable diameter to enhance the fuel/air mixing. A Dual orifice fuel nozzle shall be designed. A typical dual orifice nozzle is shown in Fig. 5.

The dual fuel nozzle is important because no single fuel nozzle will be able to deliver the engine requirements at different missions. The flow rate of the fuel is proportional to the square root of the differential pressure. Therefore, an increase in the flow rate by a factor of 40 requires an increase in the differential pressure by 1600 times. However, designing a pump with such a wide range of operation is not practical.

The pilot nozzle is open for low pressures and once the pressure reaches ΔP_{set}, the main nozzle also opens. There is also a ΔP_{min} below which the pilot nozzle is closed (roughly 30 psi). There are minimum pressure requirements to achieve good atomization of fuel.

The presence of a swirler in each fuel circuit is important to impart a tangential component of velocity before the fuel exits the nozzle. As the fuel exits and because of the centrifugal effects, a spray in the form of a cone is formed from both the pilot and main nozzles.

The main dimensions and performance of the fuel nozzle are estimated as follows:

1) We assume that ΔP_{max} is given.

2) Assume suitable values of ΔP_{set} and ΔP_{min}. The fuel nozzle performance curve should look reasonable. This can be checked after plotting the nozzle performance curve.

3) We assume that the $\dot{m}_{fp\,max}$ at the point where the secondary valve opens is known. It is assumed as a fraction of the maximum fuel flow rate as depicted in Eq. (41). A fraction of 20% should result in a reasonable performance curve.

$$\dot{m}_{fp\,max} = fr * \dot{m}_{f_pn} \tag{41}$$

4) C_{dp} and C_{ds} for both nozzles are assumed. The value ranges from 0.63 to be 0.3 at low Reynolds number and from 0.3 to 0.24 at high Reynolds number.[10] However, practical values of 0.36 and 0.27 for the primary and secondary nozzle can be used respectively.[1]

5) $Area_{pn}$ is estimated from Eq. (42). Consequently, d_{t_pn} is simply obtained from Eq. (43).

$$Area_{pn} = \left(\dot{m}_{fp\,max} \div \left(C_{dp} * \sqrt{\left(2 * \Delta P_s * \rho_f\right)}\right)\right)^{1/2} \tag{42}$$

$$d_{t_pn} = \left(4 * Area_{pn} \div \pi\right)^{1/2} \tag{43}$$

6) Similarly, $Area_{sn}$ can now be estimated from Eq. (44) and d_{t_sn} is therefore given by Eq. (45).

$$Area_{sn} = \frac{\left(\dot{m}_{f_pn} - \mathrm{C}_{dp} * Area_p * \sqrt{2 * \Delta P_{max} * \rho_{fuel}}\right)}{\left(C_{ds} * \sqrt{2 * \left(\Delta P_{max} - \Delta P_s\right) * \rho_{fuel}}\right)} \tag{44}$$

$$d_{t_sn} = \sqrt{\left(Area_s + Area_p\right) * 4 \div \pi} \tag{45}$$

7) The FN_{SI} for both nozzles is estimated from Eq. (46). That includes the density correction. The standard US flow number ($FN = \dot{m} \div \sqrt{\Delta P}$) is computed from Eq. (47).

$$FN_{SI} = \sqrt{2} * C_d * Area(m^2) \tag{46}$$

$$FN = FN_{SI} * 0.66 * 10^6 * \left(\rho_{fuel}\left(kg / m^3\right)\right)^{1/2} \tag{47}$$

8) The value of $2\theta_{pn}$ and $2\theta_{sn}$ are assumed around 90°. We calculate x from Eq. (48) for both nozzles to enable estimation of the expected spray thicknesses.[11] t is estimated using Eq. (49).

$$x = \left(1 - \left(\text{Cos}\,\theta\right)^2\right) \div \left(1 + \left(\text{Cos}\,\theta\right)^2\right) \tag{48}$$

$$t = \left(d_t - \sqrt{\left(x * d_t^{\,2}\right)}\right) \div 2 \tag{49}$$

F. Axial Swirlers Design

The swirling flow is an essential feature of all modern GTC. A swirler imparts a swirl to the air before its admittance to the combustion dome. Consequently, a Central Recirculation Zone (CRZ) is set up. The CRZ is essential for three reasons. First, it is essential for anchoring the flame. The reduced flow velocities result in a flame that is stable and anchored close to the swirler exit. Second, the mixing between air and fuel is enhanced significantly. Third, it acts as a continuous source of ignition because a part of the combustion gases is mixed with the incoming air/fuel mixture and ignites it. Different swirler configurations are used in Gas Turbine Engines. A Typical co-axial swirler is shown in Fig. 6.[12]

Two axial swirlers are to be designed. Each one has a hub diameter and a tip diameter. The primary swirler will provide the air necessary for the atomization process. It will have a hub diameter equals to the secondary nozzle swirler chamber diameter (assumed 3 times the outer diameter). The secondary swirler will provide the secondary swirling air. The hub diameter of the secondary swirler will be the tip diameter of the primary swirler (assuming zero thickness). Fig. 7 shows a schematic of the swirlers/fuel nozzle assembly. Now we summarize the design procedures for an axial swirler:

1) θ_v is assumed within 30-60°.[1]

2) v_t is assumed within 0.7-1.5 mm.[1]

3) n_v is assumed within 8-16.[1]

4) σ_v is assumed around 1.0.

5) A_{sw} is estimated using Eq. (50).[13] It is reasonable to assume that A_l is equal to A_d. Also, one should notice that pdl is approximately equal to the swirler pressure drop. k_{sw} has a value of 1.3 for flat vanes. $\dot{m}_{sw}$ has already been computed for both the primary ($\dot{m}_{c_a}$) and secondary swirler ($\dot{m}_{c_s}$).

$$A_{sw} = 1 \div \text{Cos}\left(\theta_v\right) * \left(\left(2 * \rho_3 * pdl \div \left(k_{sw} * \left(\dot{m}_{sw}\right)^2\right)\right) + 1 \div A_l^2\right)^{-0.5} \tag{50}$$

6) D_{ts} is calculated using Eq. (51). Note that that hub diameter is already known from the fuel nozzle design section.

$$A_{sw} = \pi / 4 * \left(D_{ts}^2 - D_{hs}^2\right) - 0.5 * n_v * v_t * \left(D_{ts} - D_{hs}\right) \tag{51}$$

7) Now S_N is checked using Eq. (52).[14] If the value of the swirl number is less than 1, then iteration is required until a Swirl number (S_N) of around 1.0 is reached. It is well established that S_N should be > 0.6 for a CRZ to setup.[14]

$$S_N = \frac{2/3 * \left(1 - \left(D_{hs} / D_{ts}\right)^3\right)}{\left(1 - \left(D_{hs} / D_{ts}\right)^3\right) * \tan\left(\theta_v\right)} \tag{52}$$

8) v_s is estimated using Eq. (53). Hence, v_c is estimated using Eq. (54)

$$v_s = \pi * \left(D_{hs} + D_{ts}\right) \div 2 * n_v \tag{53}$$

$$v_c = \sigma_v * v_s \tag{54}$$

G. Heat Transfer and Film Cooling Calculations

The hot gases temperature in a GTC can be higher than 2000 °C (3632 °F). This will result in immediate melting of the liner. Thus, liner cooling is a must in all GTC. Frequently, the cooling is achieved using film cooling. The air film reduces the liner wall temperature and protects it from damage. Fig. 8 shows a schematic of a cooling strip.

Our calculations start by assuming the liner is not cooled. Fig. 9 shows different heat transfer mechanisms involved in the gas turbine combustor.[2] We notice that on the hot side convection takes place between the hot gases and the liner. Also, radiation exchange takes place between the hot gases and the liner. The net heat is then conducted through the liner to the other side. Heat transfer by convection takes place between the cold side of the liner and the air flowing in the passage. Finally, heat transfer by radiation takes place between the liner and the casing. All formulas for different quantities will be introduced shortly.

When we consider the film cooling, the internal convection (C_1) will have a different formula. The reason being that the heat transfer takes place by convection between the hot gases and the effective film (temperature called effective film temperature or adiabatic wall temperature).

The procedures of evaluating the temperature of the liner (uncooled) are summarized as follows:

1) D_L is calculated by Eq. (55). L_b is taken to be equal to D_L .[2]

$$D_L = 2 * H_d \tag{55}$$

2) D_{an} is also computed from Eq. (56)

$$D_{an} = 2 * H_p \tag{56}$$

3) L_f is estimated using Eq. (57).[15]

$$L_f = 336 \div \mathrm{H}^2 \tag{57}$$

4) T_g is estimated using the NASA program.[16]

5) ε_g obtained from Eq. (58).[17] P_g is obtained by subtracting pdl from $P_{3.0}$.

$$\varepsilon_g = 1 - exp\left(-290 * P_g(\mathrm{kPa}) * L_f * \left(AF * L_b\right)^{0.5} * T_g^{-1.5}\right) \tag{58}$$

6) R_1 is calculated from Eq. (59)[2] .

$$R_1 = 0.5\sigma * \left(1 + \varepsilon_w\right) * \varepsilon_g * T_g^{1.5} * \left(T_g^{2.5} - T_{w1}^{2.5}\right) \tag{59}$$

7) C_1 (primary zone) is computed in Eq. (60)[2] . All gas properties are estimated using the NASA program.

$$C_1 = 0.017 * k_g \div D_L^{0.2} * \left(\dot{m}_{c_d} \div \left(A_L * \mu_g\right)\right)^{0.8} * \left(T_g - T_{w1}\right) \tag{60}$$

8) The conduction through the liner is just the sum of both as shown in Eq. (61).

$$K_{1-2} = R_1 + C_1 = k_w / t_w \left(T_{w1} - T_{w2}\right) \tag{61}$$

9) R_2 is calculated in Eq. (62)[2] where z is defined by Eq. (63) and depends on the area and emissivity.

$$R_2 = \sigma * z * \left(T_{w2}^4 - T_{3.0}^4\right) \tag{62}$$

$$z = \varepsilon_c \varepsilon_w \div \left(\varepsilon_c + \varepsilon_w \left(1 - \varepsilon_c\right)\left(A_w / A_c\right)\right) \tag{63}$$

10) Now we get C_2 from Eq. (64)[2].

$$C_2 = 0.02 * k_a \div D_{an}^{0.2} * \left(\dot{m}_{c_passage} \div \left(A_p * \mu_a\right)\right)^{0.8} * \left(T_{w2} - T_{3.0}\right) \tag{64}$$

11) K_{1-2} is the summation of both C_2 and R_2. Now we have 6 equations in 6 unknowns (60-65) that must be solved simultaneously to obtain the temperatures T_{w1} and T_{w2}.

$$K_{1-2} = C_2 + R_2 \tag{65}$$

12) If film cooling is considered for the liner then we repeat exactly the same previous procedures, but we evaluate C_1 using the following procedures:

a. Assume the value of L_{cs}. Practically, 1 inch is a good assumption. However, the length shouldn't exceed 5 cm.[1]

b. Assume the value of s .The value ranges between 1.5 to 2.5 mm. [18]

c. Estimate the lip thickness (t_l). The ratio of t_l / s is around 0.6. [18]

d. The value of m is calculated from Eq. (66). The gas density is computed from the pressure and temperature (in the primary zone for example). The gas velocity is estimated using the dome flow rate and from the area and density. The value of m is usually around 2 in the primary zone.[1]

$$m = \left(\rho * U\right)_{air} / \left(\rho * U\right)_{gas} \tag{66}$$

e. Based on the computed value of m we either use Eq. (67) ($0.5 < m < 1.3$) or Eq. (68) ($1.3 < m$) to calculate the film effectiveness (η).[19]

$$\eta = 1.1 * m^{0.65} * \left(\mu_a / \mu_g\right)^{0.15} * \left(L_{cs} / s\right)^{-0.2} * \left(t_l / s\right)^{-0.2}, \quad if\ 0.5 < m < 1.3 \tag{67}$$

$$\eta = 1.28 * \left(\mu_a / \mu_g\right)^{0.15} * \left(L_{cs} / s\right)^{-0.2} * \left(t_l / s\right)^{-0.2}, \quad if\ m > 1.3 \tag{68}$$

f. The film effectiveness is defined in Eq. (69). The same equation that estimates the effective wall temperature is used. The effective wall temperature is also called adiabatic wall temperature ($T_{w,ad}$).

$$\eta = \left(T_g - T_{w,ad}\right) / \left(T_g - T_a\right) \tag{69}$$

g. We estimate the slot Reynolds number (Re_s) using Eq. (70). Also, we estimate the Reynolds number based on the segment length ($Re_{L_{cs}}$) from Eq. (71). We calculate C_1 using Eq. (72) if $0.5 < m < 1.3$ or using Eq. (73) if $m > 1.3$.

$$Re_s = \rho_a * U_a * s / \mu_a \tag{70}$$

$$Re_{L_{cs}} = \rho_a * U_a * L_{cs} / \mu_a \tag{71}$$

$$C_1 = 0.069 k_a / L_{cs} * Re_{L_{cs}}^{0.7} \left(T_{w,ad} - T_{w1}\right), \quad if\ 0.5 < m < 1.3 \tag{72}$$

$$C_1 = 0.1 k_a / L_{cs} * Re_{L_{cs}}^{0.8} * \left(L_{cs} / s\right)^{-0.36} \left(T_{w,ad} - T_{w1}\right), \quad if\ m > 1.3 \tag{73}$$

h. Finally, we use the previous equations for R_1 , C_2 , R_2 , K_{1-2} and solve simultaneously to obtain the cooled wall temperature.

13) A layer of Thermal Barrier Coating (TBC) is usually added to the liner surface to decrease the surface temperature by around 50 degrees. If the liner temperature is required while considering the TBC layer then the procedures are the same, but the conduction through the TBC layer is taken into consideration. That is Eq. (74) is added to the previous list and now one more unknown is considered which is the temperature at the interface between the TBC and the liner (T_i). The thickness of the TBC (t_{TBC}) coating is assumed to be 0.5 mm. The conduction through the TBC and liner wall is obtained from Eqs. (75) and (76) respectively where k_{TBC} is the thermal conductivity of the TBC layer.

$$R_1 + C_1 = R_2 + C_2 = K_{1-i} = K_{i-2} \tag{74}$$

$$K_{1-i} = k_{TBC} / t_{TBC} \left(T_{w1} - T_i\right) \tag{75}$$

$$K_{i-2} = k_w / t_w \left(T_i - T_{w2}\right) \tag{76}$$

H. Dilution Hole Design

The temperature in the dome of a fuel rich combustor is very high and may potentially result in an immediate damage to the Gas Turbine blades if admitted directly. Also, since the combustion process in the primary zone is incomplete, dilution air is needed to complete the process and reduce the temperature of the gases.

The dilution holes are usually designed to allow for maximum penetration of the dilution jet. Typically, the dilution jet will penetrate up to 40% of the dome height.[2] An example of a jet issuing from a dilution hole is given in Fig. 10 where θ is the jet's angle, Y is the penetration and d_j is the jet diameter.

The design procedures of a simple round dilution holes are summarized as follows:

1) The jet velocity (U_j) is calculated from Eq. (77).

$$U_J = \sqrt{2 * dpl / \rho_J} \tag{77}$$

2) The pressure parameter (K) is defined by Eq. (78).[20] and is used to determine the discharge coefficient (C_d) for the simple plain dilution hole from Eq. (79)[20] where α is defined in Eq. (80) and a numerical value of 0.25 is good enough for preliminary design purpose.[2]

$$K = \left(1/2\rho_J U_J^2\right) / \left(1/2\rho_3 V_p^2\right) \tag{78}$$

$$C_d = 1.25\left(K-1\right) / \left(4K^2 - K\left(2-\alpha\right)^2\right)^{0.5} \tag{79}$$

$$\alpha = \text{hole mass flow rate}/\textit{Annulus}\text{ mass flow rate} \tag{80}$$

3) The maximum possible discharge coefficient ($C_{d\infty}$) is around 0.625 (taking the limit as K approaches ∞). The dilution jet angle (θ_d) is then estimated using Eq. (81).[21]

$$Sin\ \theta_d = C_d / C_{d\infty} \tag{81}$$

4) The momentum flux ratio (J) is determined from Eq. (82) where ρ_g and U_g are the hot gases density and velocity respectively. Hot gases density is obtained from the NASA thermal equilibrium program using the primary zone equivalence ratio.[16] The value of U_g is then obtained from the total dome flow rate (area and density are both known) as follows:

$$J = \rho_J U_J^2 / \rho_g U_g^2 \tag{82}$$

5) Two sets of dilution holes will be sized. The first set provides the primary dilution jets which we will refer to as the big holes. The secondary jets that trims the temperature profiles will be referred to as the small holes. We begin by sizing the big holes and then the small holes.

6) The relation between the maximum penetration of the jet (Y_{max}) and the jet diameter.[2] is shown in Eq. (83). A maximum penetration of 0.4 dome height is required. The equation is solved for the required primary jet diameter to achieve such penetration.

$$Y_{max} = 1.25 d_j J^{0.5} \dot{m}_{c_d} / \left(\dot{m}_{c_d} + \dot{m}_{c_p} \right) \tag{83}$$

7) The hole diameter (d_h) is estimated using Eq. (84).

$$d_h = d_j / \sqrt{C_d} \tag{84}$$

8) The number of jets (n) required is then estimated by a simple mass balance from Eq. (85) where $\dot{m}_{jet}$ is the total dilution air flow rate through the big holes. The number is then corrected to the nearest multiple of number of fuel nozzles. We will assume that each band of holes (see Fig. 11 for definition) has two holes per fuel injector. Now the number of rows or bands (n_{bands}) required for the dilution air is simply estimated using Eq. (86).

$$n = 15.25 \dot{m}_{Jet} \left(dpl\ P_3 / T_3 \right)^{-0.5} / d_j^2 \tag{85}$$

$$n_{bands} = n / N_{fn} / 4 \tag{86}$$

9) For the small holes we will repeat the previous procedures. However, we will assume twice the number of big holes per fuel nozzle.

III. Performance Evaluation

Since the main dimensions of the SAC have now been estimated, performance evaluation is the next step. The parameters involved in the evaluation process are: the fuel spray Souter Mean Diameter (SMD), droplet life time (t_d , time required for complete evaporation), combustor residence time (t_r), and NOx and CO emissions.

The SMD of the fuel spray is a good indication of the droplet evaporation characteristics. The droplet lifetime needs to be estimated and compared to the available residence time in the combustor. The life time must be less than the available residence time. Otherwise, fuel droplets would emerge from the combustor and cause low combustion

efficiency and high unburnt hydrocarbons emissions. There are stringent regulations on the amounts of NOx and CO and we will use the empirical formulas for their estimation. We also use the Zeldovich mechanism to solve for the NOx production rates.

The combustor performance evaluation is carried out as follows:

1. The SMD for the primary and secondary fuel jets is estimated using Eq. (87)[22] where σ_f is the surface tension of the fuel and μ_f is the viscosity of the fuel. To include the air blast effect (account for atomizing air) we use Eq. (88)[2]. U_r is the relative velocity between the air and fuel (m/s). ALR is the mass flow rate ratio between the atomizing air and fuel ($\dot{m}_{c_a} / \dot{m}_f$).

$$SMD = 4.52\left(\sigma_f \mu_f^2 / \left(\rho_{3.0}\ dpl^2\right)\right)^{0.25} \left(t\cos(\theta)\right)^{0.25} + 0.39\left(\sigma_f \rho_f / \left(\rho_{3.0}\ dpl\right)\right)^{0.25} \left(t\cos(\theta)\right)^{0.75} \tag{87}$$

$$SMD = 0.48 d_{t_sn}\left(\sigma_f / \left(\rho_{3.0} d_{t_sn} U_r^{\,2}\right)\right)^{0.4} \left(1 + ALR^{-1}\right)^{0.4} + 0.15 d_{t_sn}\left(\mu_f^2 / \left(\sigma_f \rho_f d_{t_sn}\right)\right)^{0.5} \left(1 + ALR^{-1}\right) \tag{88}$$

2. The combustor is divided into three zones. Total flow rate is split into three parts representing the flow rate in each zone. For each region the temperature as well as the thermal properties are obtained from the NASA thermal equilibrium program at the corresponding equivalence ratio.[16] Now we can get an estimate of the t_d in each zone according to the procedures suggested by Turns[23]: The transfer number (B_q) is estimated using Eq. (89) where FA_{th} is the stoichiometric fuel air ratio by mass, h_{fg} is the latent heat of vaporization of the fuel droplet and C_{pfv} is the specific heat of the gaseous mixture (obtained from NASA program) . The Reynolds number based on the droplet diameter (Re_d) is calculated from Eq. (90) where V_r is the relative velocity between the fuel droplet and the combustion products. We will assume the V_r to be 0.3 of the U_g . The fuel droplet diameter (D_f) is the SMD estimated previously. The Nusselt number (Nu) number is then computed in Eq. (91). The evaporation constant (K_v) is estimated using Eq. (92). k_{fv} is the gaseous mixture thermal conductivity (from NASA program). Finally, the t_d is estimated from Eq. (93). If all the previous variables are substituted with the numerical values corresponding to the primary zone, an estimate of the lifetime based on the primary zone conditions can be obtained:

$$B_g = \left(C_{pfv}\left(T_g - T_s\right) + LHV / FA_{th}\right) / h_{fg} \tag{89}$$

$$Re_d = \rho_g V_r D / \mu_g \tag{90}$$

$$Nu = 2 + 0.555\, Re_d^{1/2}\, Pr_g^{1/3} / \left(1 + 1.232 / \left(Re_d^{1/2}\, Pr_g^{4/3}\right)\right)^{1/2} \tag{91}$$

$$K_v = 4k_{fv} Nu / \left(\rho_f C_{pfv}\right) ln\left(B_g + 1\right) \tag{92}$$

$$t_d = D^2 / K_v \tag{93}$$

3. We also assume that the combustor is length is divided into three equal parts such that the each zone length (L_{zone}) is just L_c/3. The gas velocity in each zone (V_{zone}) is estimated using the flow rate ($\dot{m} / \rho A$). A simple estimate of the residence time in each region is then easily obtained using Eq. (94). The total residence time is the sum of the three region residence times. If the residence time in the primary zone is less than the fuel droplet evaporation time, step 2 should be repeated in the secondary region while using the D-squared law to get the new particle SMD .

$$t_r = L_{zone} / V_{zone} \tag{94}$$

4. The overall NOx can be calculated in g/kg fuel using Eq. (95)[24] where V_c is the combustor volume and T_{st} is the flame temperature assuming the air and fuel are in stoichiometric conditions (obtained from NASA program at ϕ=1).

$$NOx = 9 * 10^{-8} P_g(kpa)^{1.25}\, V_c(m^3)\, Exp\left(0.01 T_{st}(K)\right) / \left(\dot{m}_{total}(kg/s)\, T_g(K)\right) \tag{95}$$

5. The CO emissions can be estimated in g/kg fuel using Eq. (96)[24] where V_e is the volume of fuel evaporation defined in Eq. (97) and ρ_g is the gas density in the primary zone.

$$CO = 86 \dot{m}_{total} T_g Exp\left(-0.00345 T_g\right) / \left(\left(V_c - V_e\right)\left(dpl / P_{3.0}\right)^{0.5} P_g^{1.5}\right) \tag{96}$$

$$V_e = 0.55 \dot{m}_{c_d} t_d / \rho_g \tag{97}$$

6. Another way to estimate the NOx (thermal only) is by using the Zeldovich mechanism[25, 26] and the extended Zeldovidh mechanism.[27] The equations can be solved approximately to provide a rough value for the NOx . The

equations and the reaction rates are summarized in several references.[12-17] The three equations responsible for the formation of the thermal NOx are Eq. (98) to (100). The forward (K_f) and backward (K_b) reaction rate constants for the three reactions are given by Eq. (101) to (106). The mole fraction of oxygen ($O2$), nitrogen ($N2$), monatomic oxygen (O), water vapor ($H2O$), hydroxyl (OH) and monatomic hydrogen (H) must be known for the three zones inside the combustor. A good approximation could be obtained from the NASA program assuming they are in thermal equilibrium. The mole fraction is then converted into molar concentration using Eq. (107). x_i represents the mole fraction of the species i where N_i represents the molar concentration of the species i and P_z and T_z are the pressure and temperature of the specific zone considered. R_c is constant of conversion=82.05 $cm^3.atm/(gmol.K)$.We also assume that the monatomic nitrogen (N) is in equilibrium. Using this information, the N molar concentration (N_N) is evaluated using Eq. (108) and the rate of generation of NO (dNO/dt) is given by Eq. (109). Equations (108) and (109) are solved in each zone. The total integration time is the residence time. The NO concentration is computed in ppm from Eq. (110). The previous procedures are repeated to obtain the NO concentration in all three zones. Finally, the total NO (NO_{total}) generated in the combustor is estimated using Eq. (111). The rate of NOx in g/s is obtained from Eq. (112).

$$\mathrm{O} + \mathrm{N2} \Leftrightarrow \mathrm{NO} + \mathrm{N} \tag{98}$$

$$\mathrm{N} + \mathrm{O2} \Leftrightarrow \mathrm{NO} + \mathrm{O} \tag{99}$$

$$\mathrm{N} + \mathrm{OH} \Leftrightarrow \mathrm{NO} + \mathrm{H} \tag{100}$$

$$K_{f1} = 1.8 * 10^{14} Exp\left(-38370 / T_z\right) \tag{101}$$

$$K_{b1} = 3.8 * 10^{13} Exp\left(-425 / T_z\right) \tag{102}$$

$$K_{f2} = 1.8 * 10^{10} * T * Exp\left(-4680 / T_z\right) \tag{103}$$

$$K_{b2} = 3.8 * 10^{9} Exp\left(-20820 / T_z\right) \tag{104}$$

$$K_{f3} = 7.1 * 10^{13} * T_z * Exp\left(-450 / T_z\right) \tag{105}$$

$$K_{b3} = 1.7 * 10^{14} Exp\left(-24560 / T_z\right) \tag{106}$$

$$N_i = P_z / \left(R_c T_z\right) * x_i \tag{107}$$

$$N_N = K_{f1}.N_O.N_{N2} + K_{b2}.N_{NO}.N_O + K_{b3}.N_{NO}.N_H / \left(K_{f2}.N_{O2} + K_{b1}.N_{NO} + K_{f3}.N_{OH}\right) \tag{108}$$

$$dN_{NO} / dt = K_{f1}.N_O.N_{N2} + K_{f2}.N_{NO}.N_{O2} + K_{f3}.N_N.N_{OH} - \left(K_{b1}.N_{NO}.N_N + K_{b2}.N_{NO}.N_O + K_{b3}.N_{NO}.N_H\right) \tag{109}$$

$$NO = N_{NO} / \left(P_z / R_c T_z\right) * 10^6 \left(ppm\right) \tag{110}$$

$$NO_{total} = \left(\dot{m}_{pz} NO_{pz} + \dot{m}_{sz} NO_{sz} + \dot{m}_{dz} NO_{dz}\right) / \left(\dot{m}_{pz} + \dot{m}_{sz} + \dot{m}_{dz}\right) \tag{111}$$

$$NOx(g / s) = NO_{total} / 10^6 * \left(\dot{m}_{pz} + \dot{m}_{sz} + \dot{m}_{dz}\right) * 1000 \tag{112}$$

IV. Design of a SAC using the developed Code

The developed code has a user friendly interface as shown in Fig. 12. There are nine modules and each one runs by pressing a button. The structure of all modules is similar. The user interface of each module is divided into two portions: the upper portion is for the user input while the lower is for the program output. Fig. 12 shows the startup or the main page of the program. The user has to go through all the design modules in order. When button one is pressed the engine parameters module is loaded and the screen changes as shown in Fig. 13. The Engine parameters we discussed previously are entered and then the user proceeds with the design process. Fig. 13 is self explanatory. All the design modules work in a similar fashion. Fig. 14 shows the aerodynamic diffuser design. Fig. 15 shows the air distribution through the combustor. Fig. 16 shows the combustor sizing process. Fuel nozzle design is presented in Fig. 17. The axial swirlers design is shown in Fig. 18. Heat transfer calculations and temperatures estimation are shown in Fig. 19. Dilution holes design is shown in Fig. 20. Finally, the performance of the combustor is evaluated and shown in Fig. 21. The numerical values obtained from the developed code are practical and have good agreement with existing GTC.

References

[1]Mellor, A. M., *Design of modern turbine combustors*, Academic Press, London ; San Diego, 1990.

[2]Lefebvre, A. H., *Gas turbine combustion*, Taylor & Francis, Philadelphia, 1999.

[3]Dodds, W. J., and Bahr, D. W., "Combustion system design," *Design of Modern Turbine Combustors*. Academic Press, New York, 1990, pp. 343-476.

[4]Mattingly, J. D., Heiser, W. H., and Pratt, D. T., "Aircraft Engine Design." 2nd ed., American Institute of Aeronautics and Astronautics, Reston, VA, 2002.

[5]Sawyer, J. W., *Sawyer's Gas Turbine Engineering Handbook*, Turbomachinery International Publications, Norwalk, CT., 1985.

[6]Hsiao, G., Mongia, H. C., and Atul, V. "Swirl Cup Modeling--Part II: Inlet Boundary Conditions," *41st Aerospace Sciences Meeting and Exhibit*. AIAA, Reno, NV, 2003.

[7]Holderness, F. H., and Macfarlane, J. J. "Soot formation in rich Kerosene flames at high pressure," *AGARD CP*. Vol. 125, 1973.

[8]Taylor, J. R., and Sabla, P. E. "Combustion Systems design," *Notes from University of Tennessee Space Institute*. 1988.

[9]Reneau, L. R. "Performance and design of straight, two-dimensional diffusers." Dept. of Mechanical Engineering, Stanford University., 1965, pp. xvii, 293 p.

[10]Radcliffe, A., "The performance of a type of swirl atomizer," *Proceedings of the Institution of Mechanical Engineers* Vol. 169, 1955, pp. 93-106.

[11]Rizk, N. K., and Lefebvre, A. H., "Internal Flow Characteristics of Simplex Swirl Atomizers," *Journal of Propulsion and Power* Vol. 1, No. 3, 1985, pp. 200-204.

[12]Mongia, H. "Perspective of Combustion Modeling for Gas Turbine Combustors " *42nd AIAA Aerospace Sciences Meeting and Exhibit*. Reno, Nevada, 2004.

[13]Knight, M. A., and Walker, R. B. "The Component Pressure losses in Combustion Chambers," *Aeronautical Research Council R and M 2987*. England, 1957.

[14]Beer, J. M., and Chigier, N., *Combustion aerodynamics*, Applied Science Publishers LTD, London, 1972.

[15]Lefebvre, A. H. "Influence of fuel properties on gas-turbine combustion performance." Purdue University, Lafayette, IN (USA), 1985.

[16]McBride, B., and Gordon, S. "Computer Program for Calculation of Complex Chemical Equilibrium Compositions and Applications." NASA-RP-1311-P2, 1996.

[17]Reeves, D. "Flame Radiation in an Industrial Gas Turbine Combustion Chamber." England, 1956.

[18]Sturgess, G. J., "Design Of Combustor Cooling Slots For High Film Effectivness .1. Film General Development," *Journal of Engineering for Gas Turbines and Power-Transactions of the Asme* Vol. 108, No. 2, 1986, pp. 354-360.

[19]Ballal, D. R., and Lefebvre, A. H., "A Proposed Method for Calculating Film Cooled Wall Temperatures in Gas Turbine Combustor Chambers," *ASME*, 1972.

[20]Kaddah, K. S. "Discharge Coefficients and Jet DEflection Angles for Combustor Liner Air Entry Holes," *College of Aeronautics*. Vol. MSc, Cranfield, England, 1964.

[21]"The Design and Performance of Gas Turbine Combustion Chambers." Northern Research and Engineering Corporation, 1964.

[22]Lefebvre, A. H., "The Prediction of Sauter Mean Diameter for Simplex Pressure-Swirl Atomizers," *Atomization and Spray Technology* Vol. 3, 1987, pp. 37-51.

[23]Turns, S. R., *An Introduction to Combustion*, McGraw-Hill, 2000.

[24]Lefebvre, A. H., "Fuel Effects on Gas Turbine Combustion-Liner Temperatrure, PAttern Factor, and Pollutant Emissions," *Journal of Aircraft* Vol. 21, No. 11, 1984, pp. 887-898.

[25]Zeldovich, J., "The Oxidation of Nitrogen in Combustion and Explosions," *Acta Physicochimica* Vol. 21, No. 4, 1946, pp. 577-628.

[26]Zeldovich, Y. B., Sadovinikov, P. Y., and Frank-Kamenetskii, D. A., "Oxidation of Nitrogen in Combustion," *Academy of Sciences of USSR, Institute of Chemical physics, Moscow-Leningrad*, 1947.

[27]Lavoie, G. A., Heywood, J. B., and Keck, J. C., "Experimental and Theoretical Study of Nitric Oxide Formation in Internal Combustion Engines,," *Combustion Science and Technology* Vol. 1, 1970, pp. 313-326.

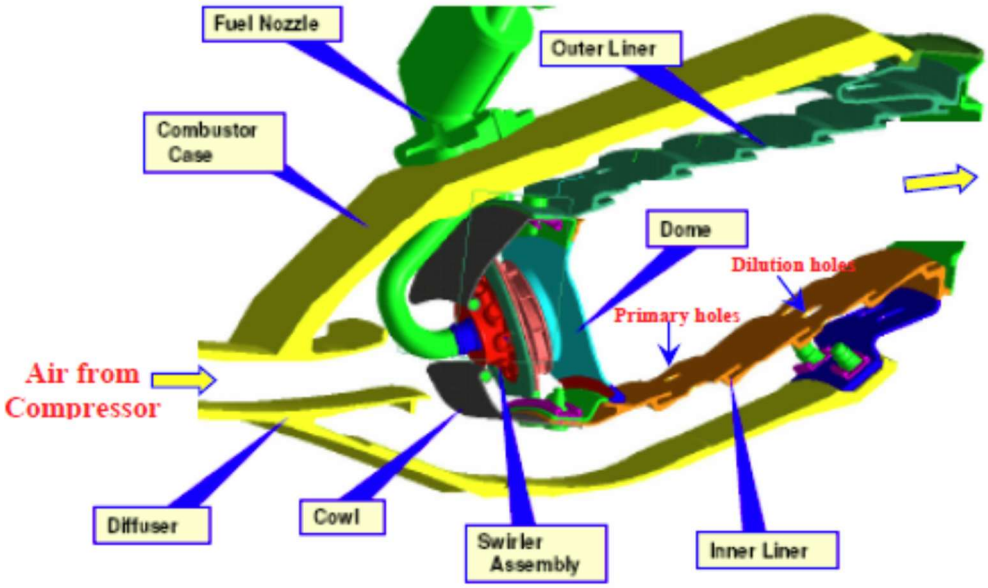

Figure 1. Typical assembly of GEAE combustor.[6]

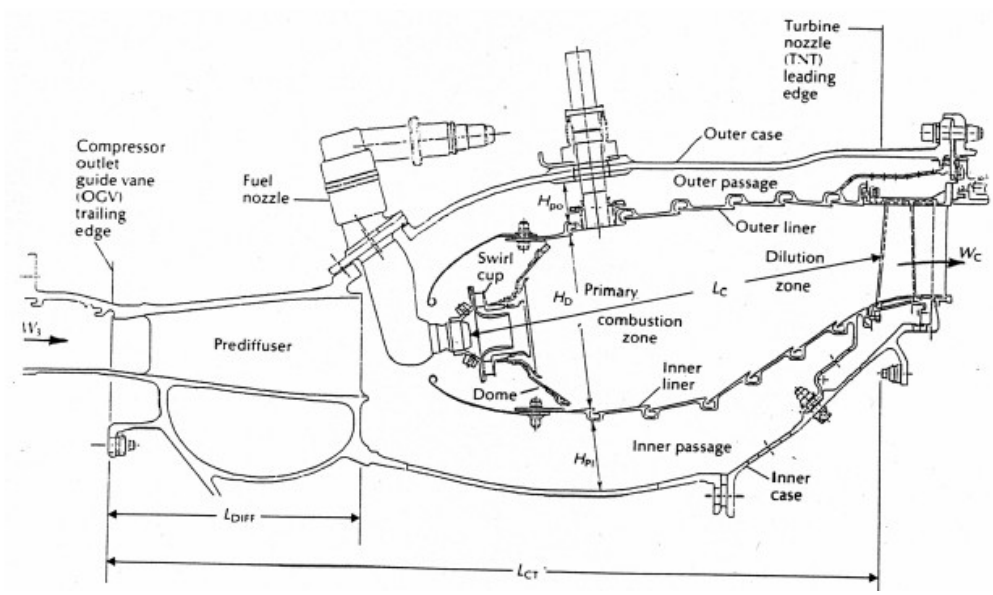

Figure 2. Single Annular Combustor geometry (GE CF6-80C).[1]

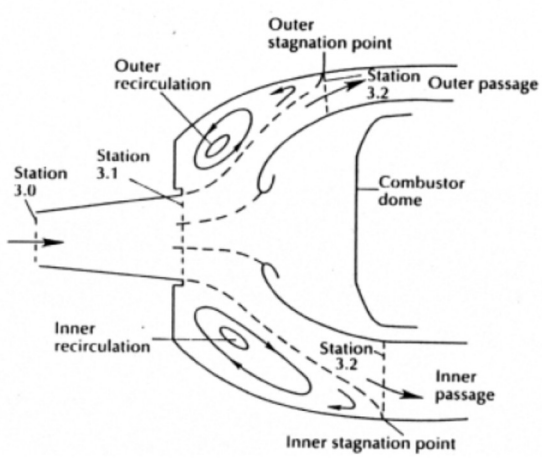

Figure 3. Different stations at combustor inlet.[1]

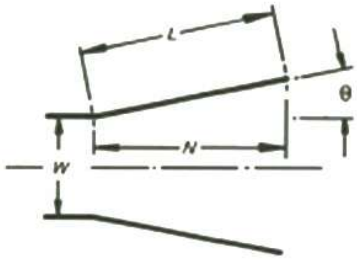

Figure 4. Typical pre-diffuser dimensions.

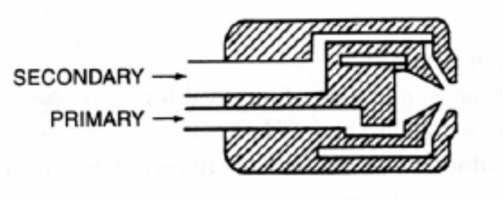

Figure 5 Typical dual orifice fuel nozzle.[2]

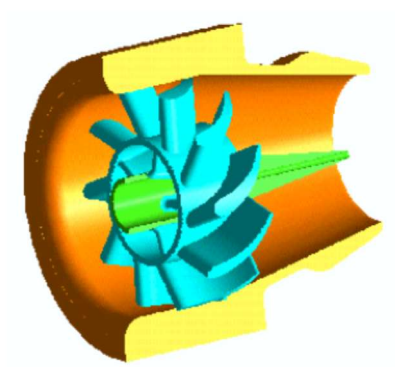

Figure 6 Typical co-axial swirlers.[9]

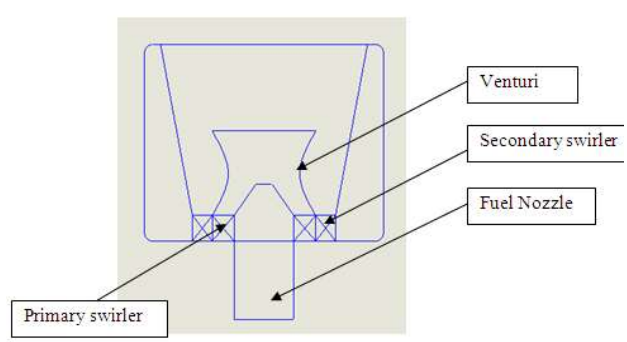

Figure 7 Fuel Nozzle/Swirlers assembly.

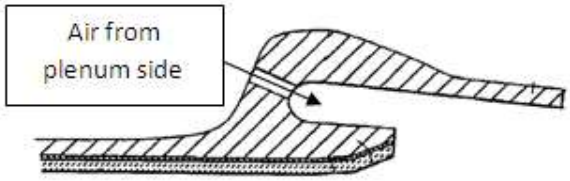

Figure 8 Schematic of a cooling strip.

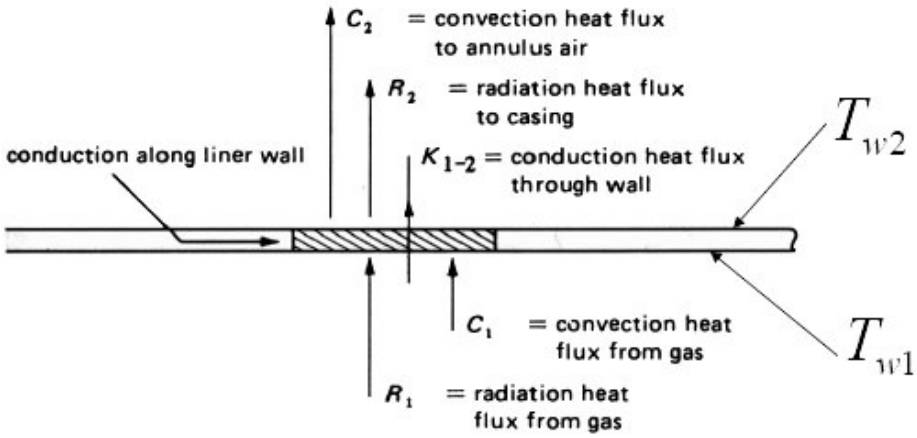

Figure 9 Heat transfer processes in the combustor.[2]

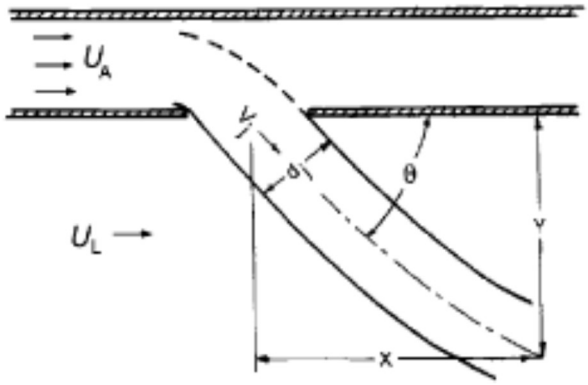

Figure 10 Jet issuing from a Dilution Hole.[2]

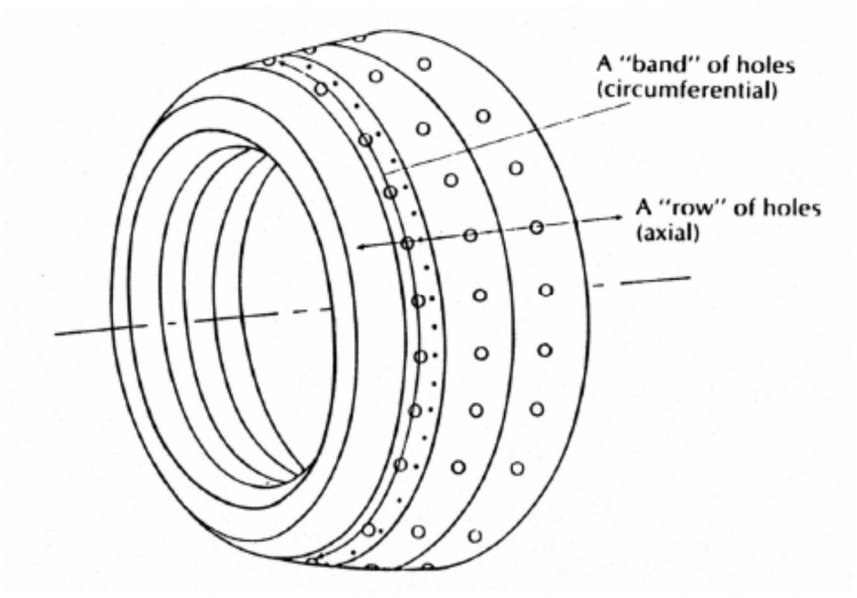

Figure 11 Rows and bands of Dilution Holes.[2]

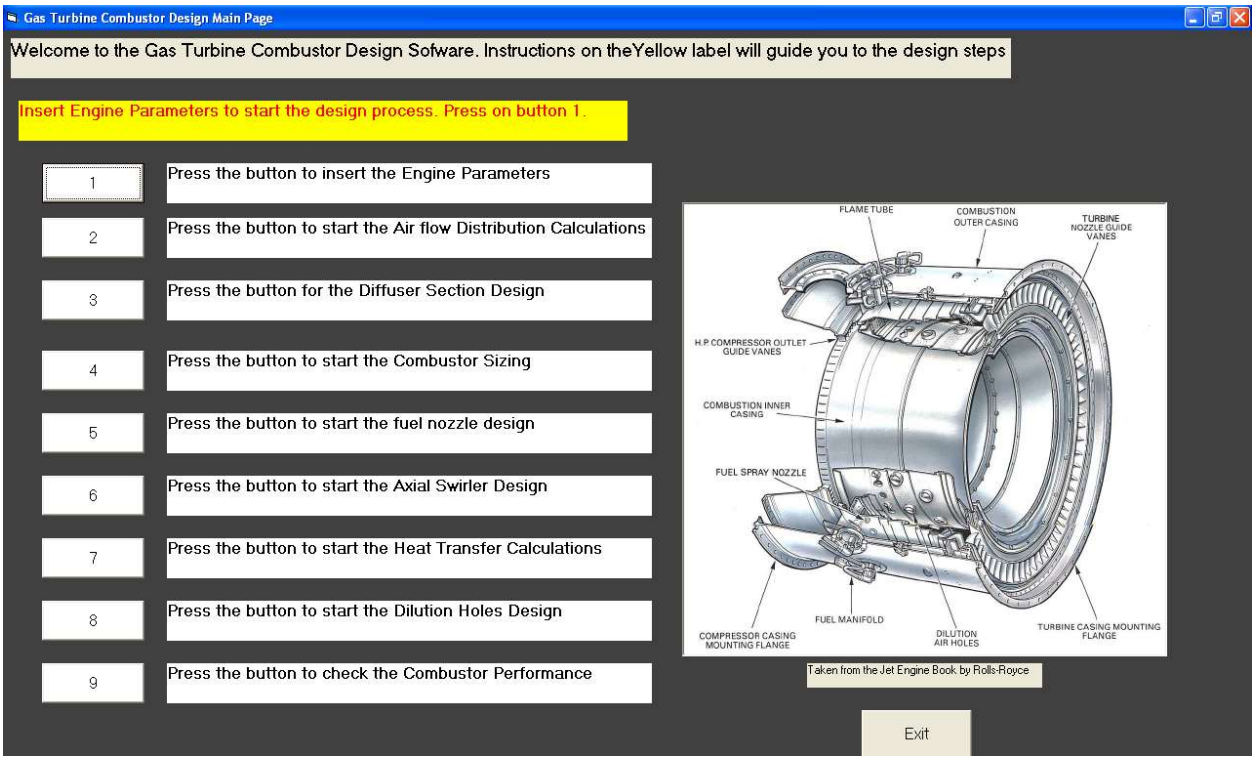

Figure 12 Screen shot of the developed code main page.

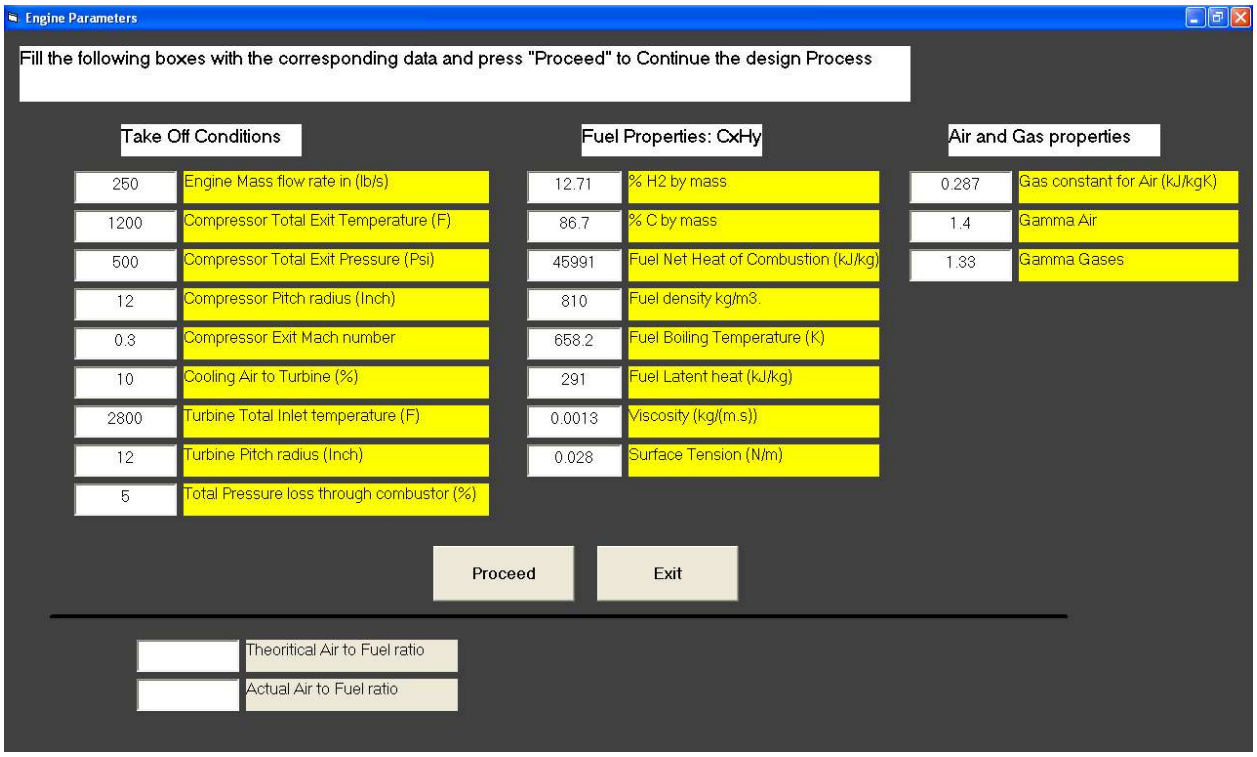

Figure 13 Screen shot of the input parameters required to run the code.

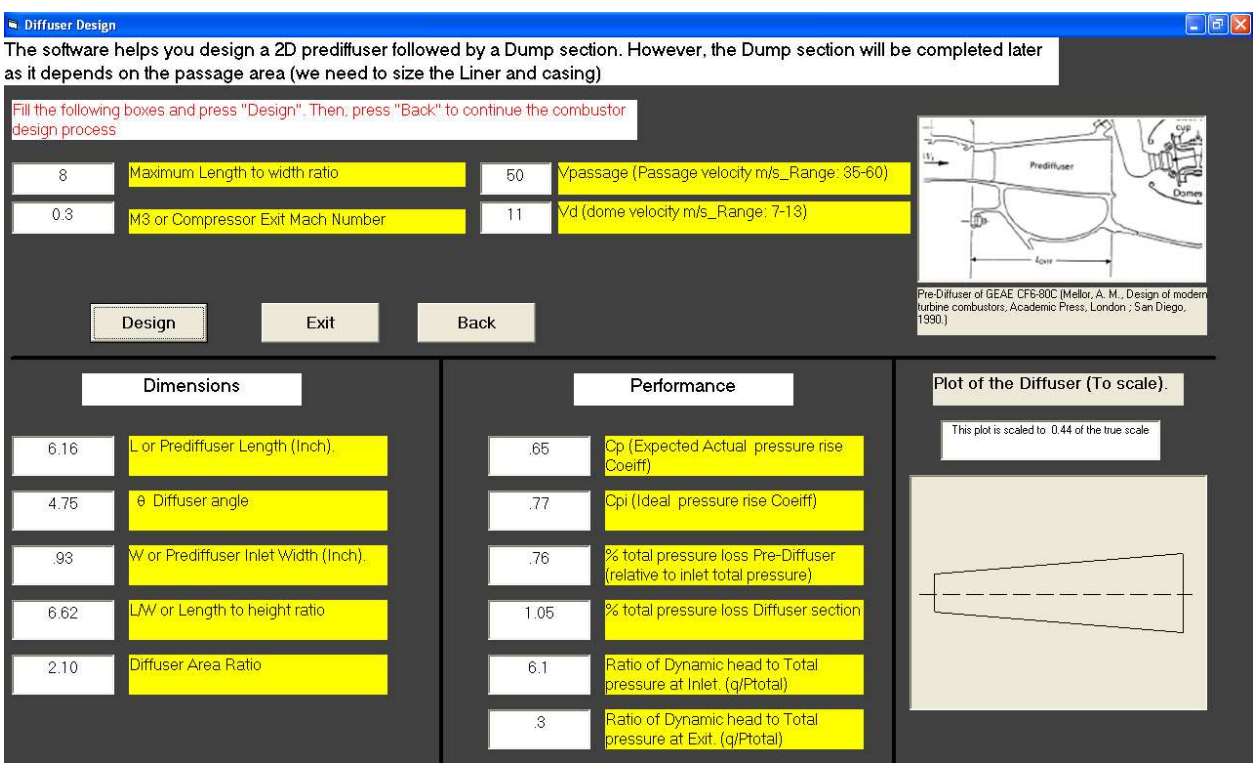

Figure 14 Screen shot of the developed code while running the Pre-diffuser (aerodynamic) design module.

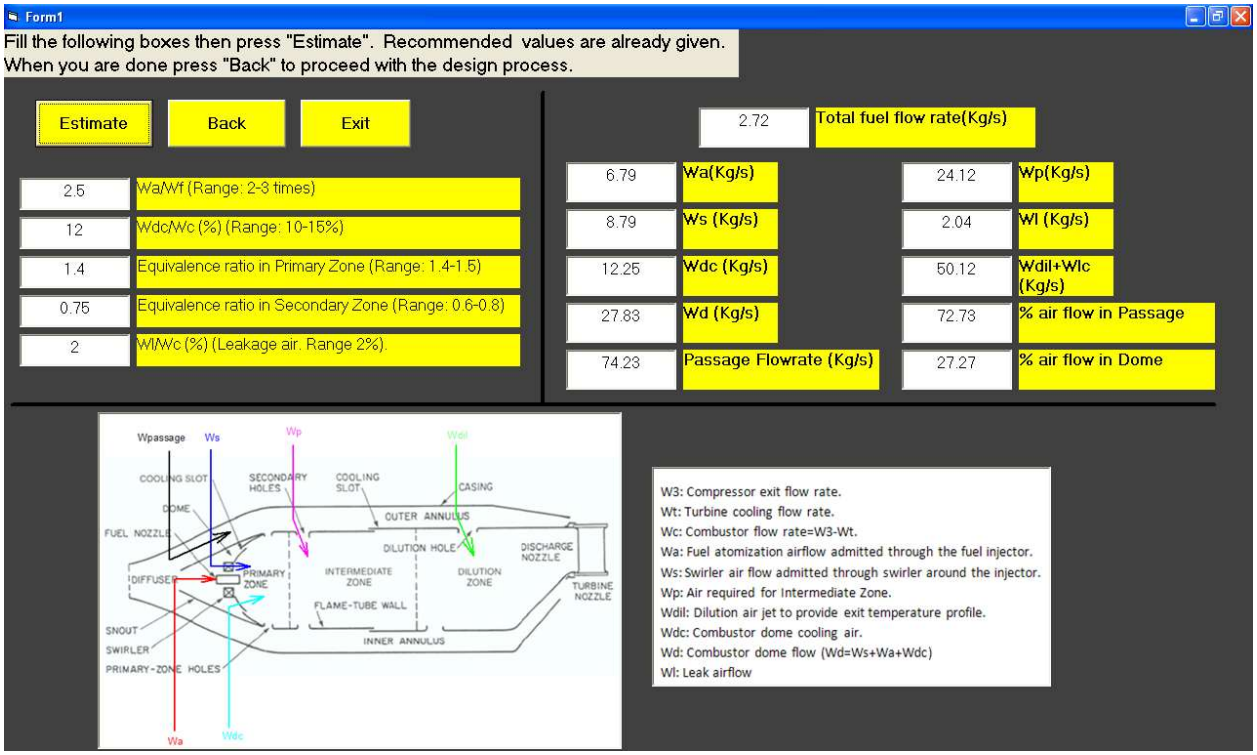

Figure 15 Screen shot of the developed code while running the air distribution module.

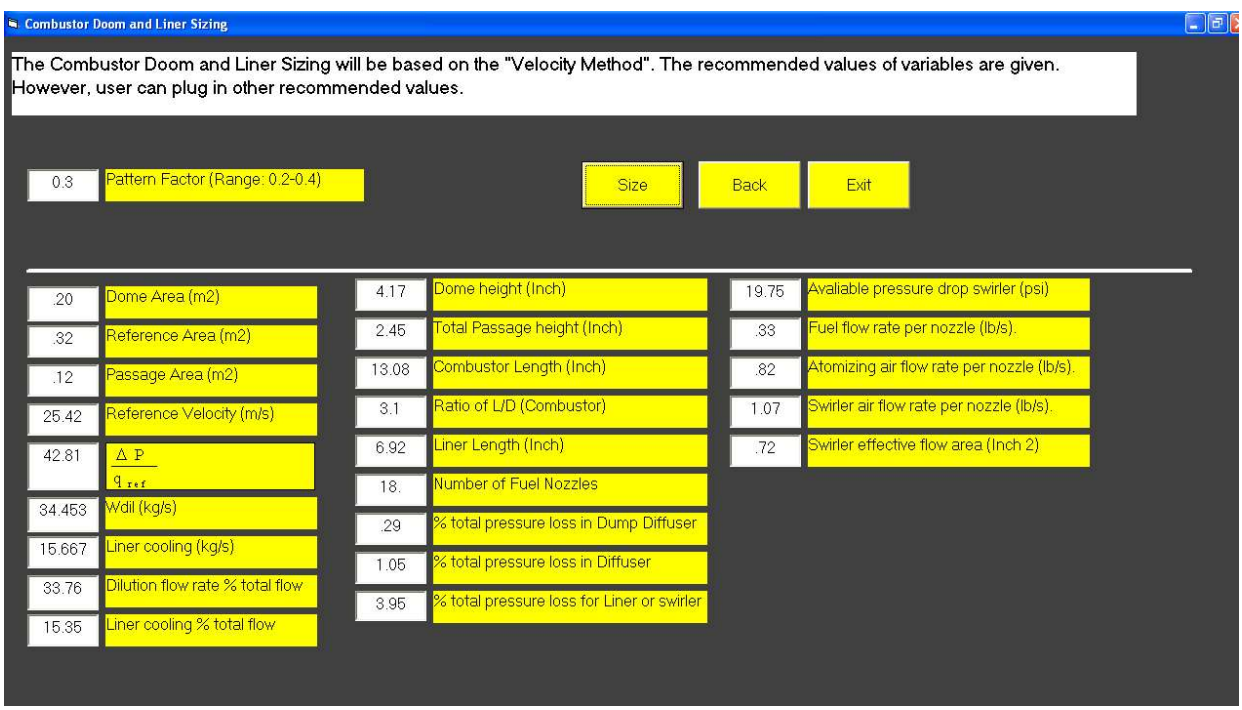

Figure 16 Screen shot of the developed code while running the combustor sizing module.

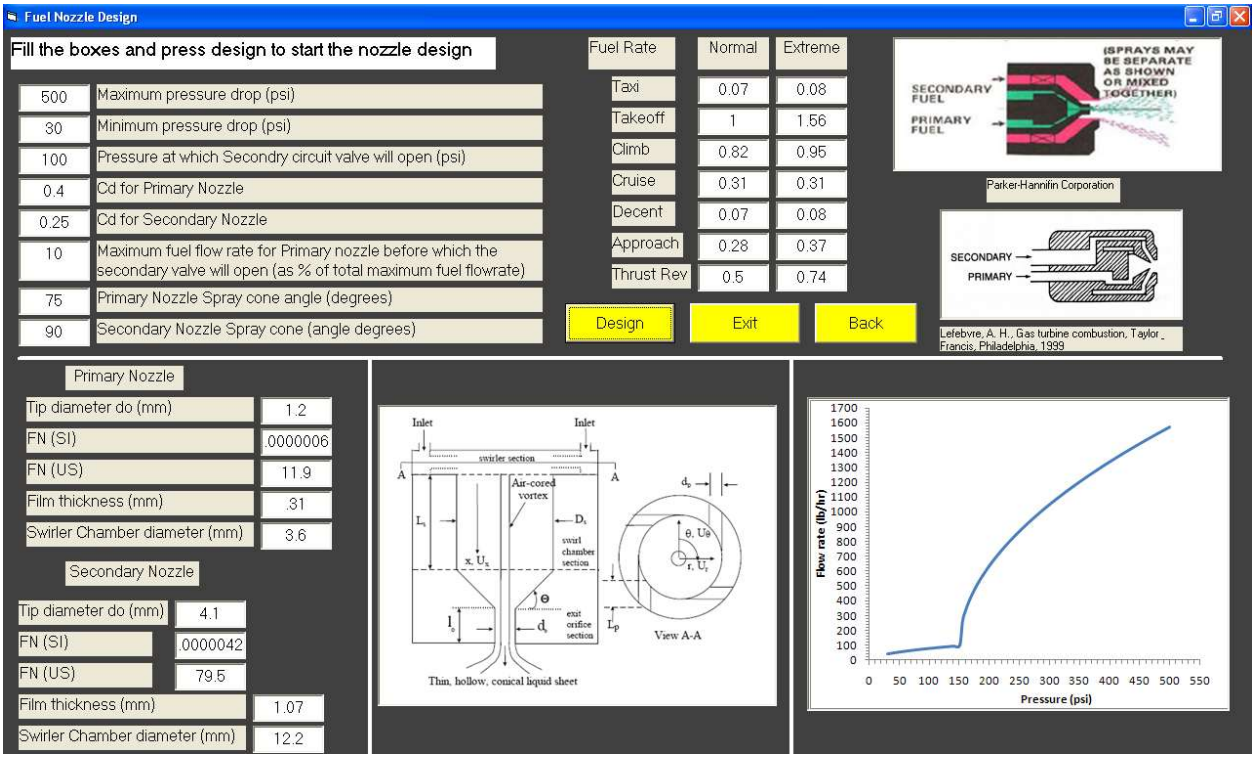

Figure 17 Screen shot of the developed code while running the fuel nozzle design module.

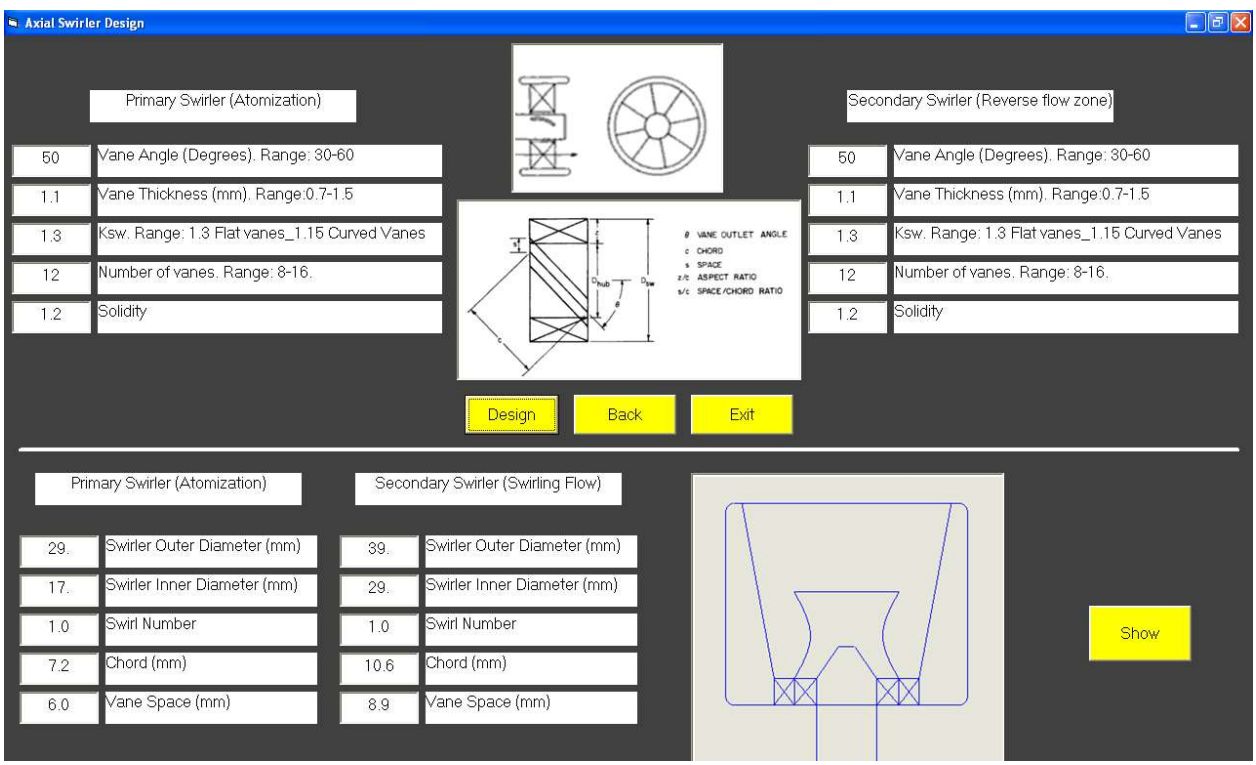

Figure 18 Screen shot of the developed code while running the axial swirler design module.

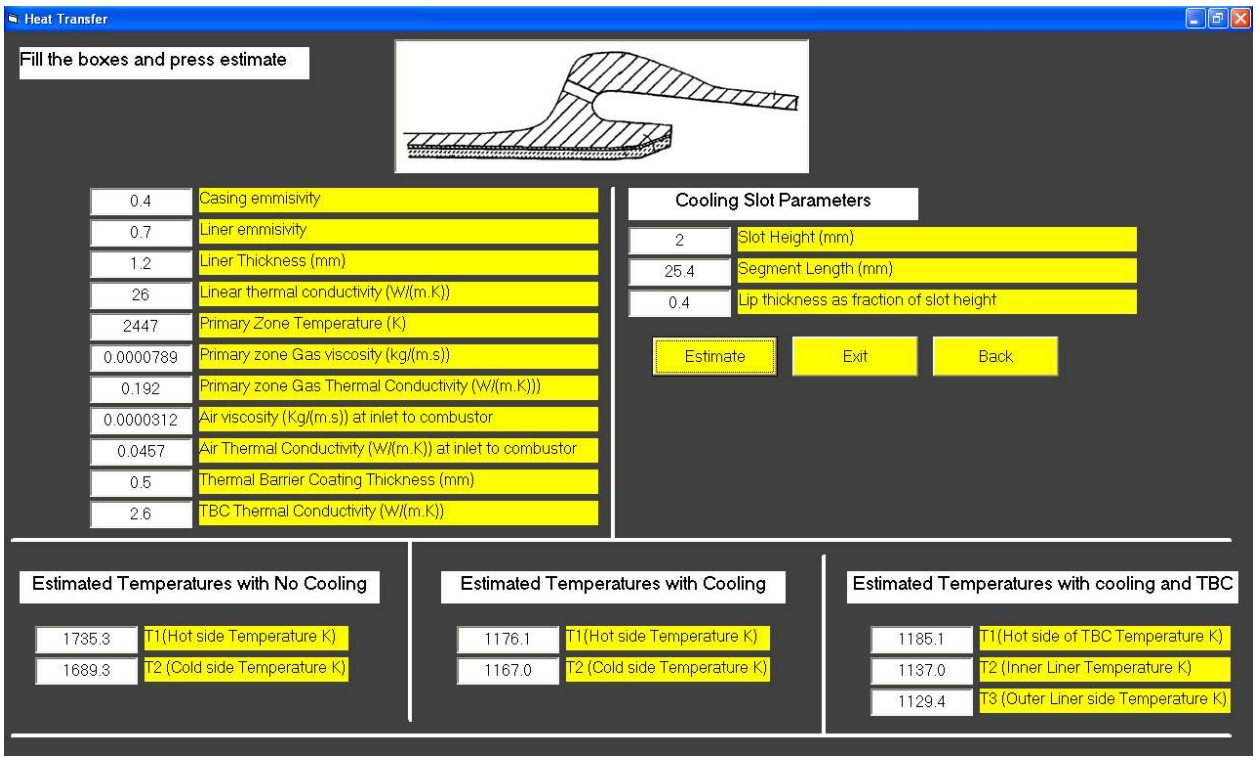

Figure 19 Screen shot of the developed code while running the liner heat transfer module.

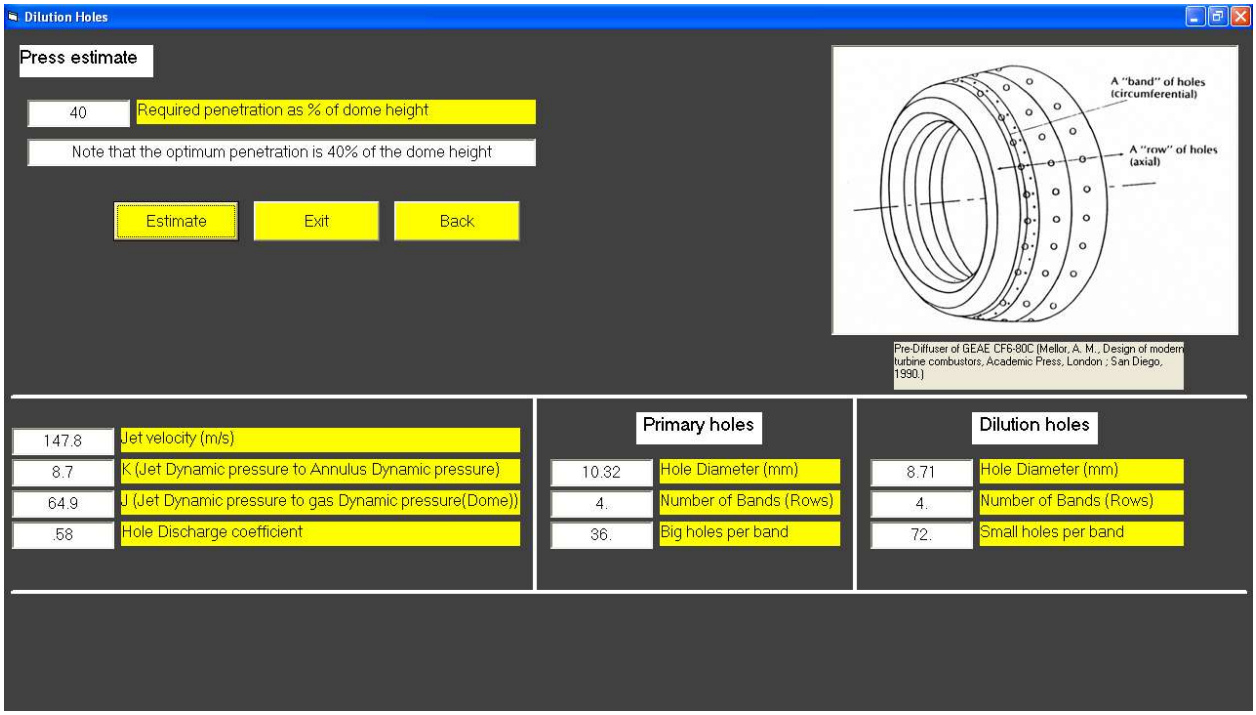

Figure 20 Screen shot of the developed code while running the dilution hole sizing module.

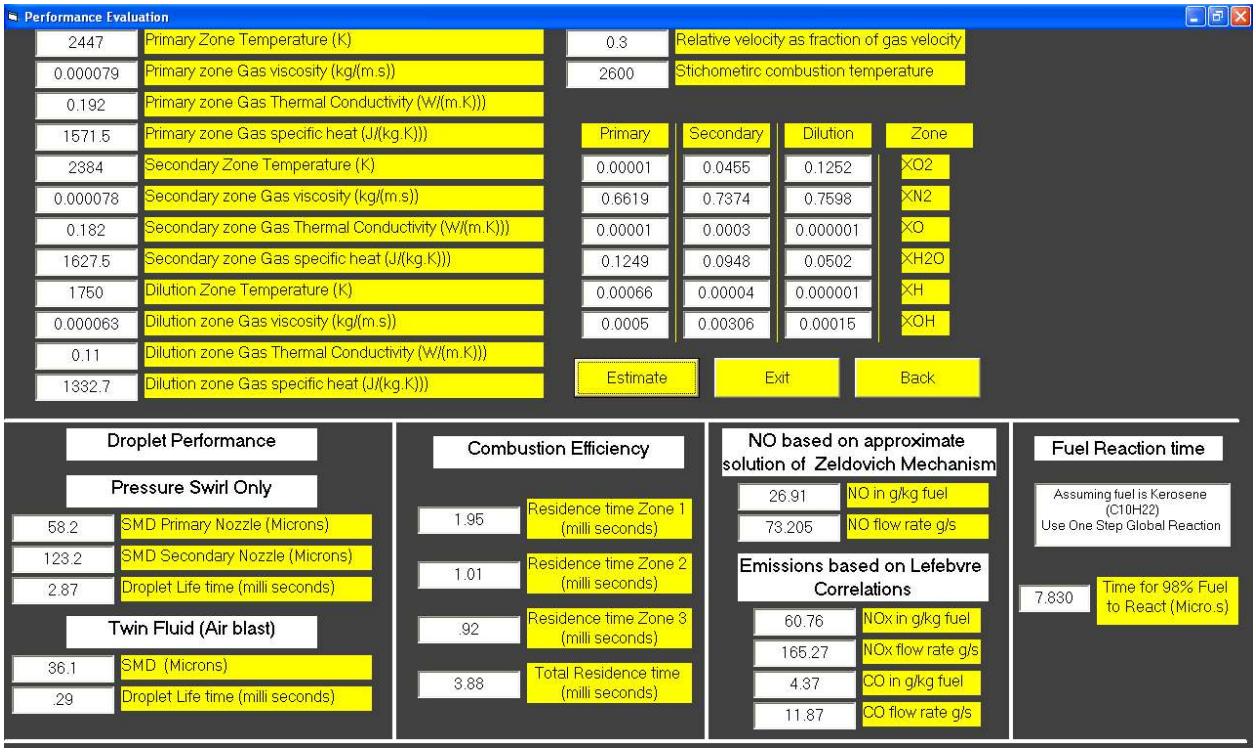

Figure 21 Screen shot of the developed code while running performance estimation module.